REMKOM LLC
Tel./fax: (02233) 7-00-91, 7-33-77, 7-05-74
E-mail: remkom@remkom.by
www.remkom.by

OPERATING MANUAL

DIAPHRAGM PUMPS

TU BY 790090821.011-2024



H-260



H-280

	Read this manual before using the product. Compliance with the safety instructions in this document is mandatory. Keep the manual at the place where the product is used throughout its service life.

Contents

Table of contents

1. GENERAL INFORMATION 3
2. CONSTRUCTION AND OPERATION 5
3. TECHNICAL SPECIFICATIONS 7
4. SAFETY INSTRUCTIONS 7
5. PREPARATION FOR USE 8
6. HYDRAULIC SYSTEM CHECKS 10
7. OPERATING PROCEDURES (INSTALLATION, START-UP, OPERATION AND PRESERVATION) 12
8. MAINTENANCE AND LUBRICATION 15
9. REPAIRS (TROUBLESHOOTING) 18
10. MASS AND OIL CAPACITY 19
11. TIGHTENING TORQUES 19
12. TRANSPORT AND STORAGE 20
13. SCOPE OF SUPPLY (SPECIAL ACCESSORIES) 21

1. GENERAL INFORMATION

1.1. Safety symbols and signal words

NOTICE – this symbol or signal word indicates a potentially hazardous situation that could damage the equipment, impair pump operation or cause pump failure.



DANGER – this symbol or signal word indicates an immediate hazard to the life and health of personnel. Failure to take the specified precautions will result in serious injury or death.



1.2. Product marking and identification

The pump identification details and principal technical specifications are shown on the nameplate (technical data plate) attached to the pump housing.

An example of the nameplate location and information is shown in Figure 1.

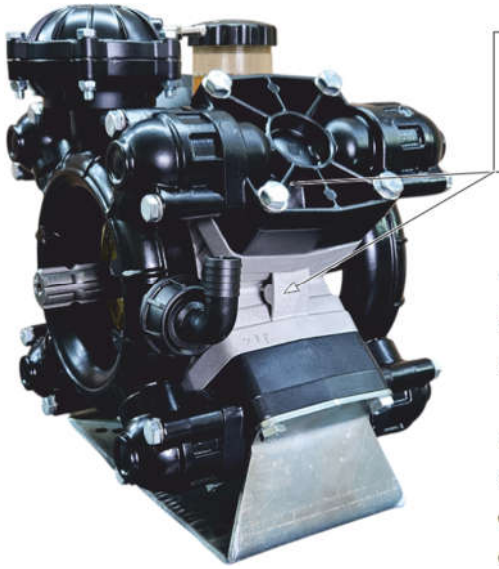



The nameplate provides the following information:

- the manufacturer's name, address and trademark;
- pump name and model;
- product serial number;
- date of manufacture (month and year);
- minimum and maximum operating parameters (operating pressure, flow rate and shaft speed);

Fig. 1. Diaphragm pump

- the technical specifications governing pump manufacture;
- EAC marking.

1.3. Manufacturer's (supplier's) warranty

1.3.1. The manufacturer, Remkom LLC, warrants that the diaphragm pump (referred to below as the pump) complies with the applicable technical specifications, provided the user follows the operating, transport, storage and installation instructions in this manual.

1.3.2. The pump is covered by a 36-month warranty from the date of commissioning. The warranty must start no later than 12 months after collection from the manufacturer's warehouse.

1.3.3. During the warranty period, the manufacturer will repair or replace, free of charge, parts and assemblies that fail prematurely due to a manufacturing fault, provided the user has complied with the maintenance and operating instructions.

1.3.4. A pump submitted for warranty repair (a warranty claim) must be complete, cleaned of all pumped liquid residues and show no evidence of unauthorised dismantling or repairs.

1.3.5. The manufacturer's warranty does not cover damage or defects caused by:

- mechanical damage during transport, installation or operation, including dropping or impact;
- failure to follow commissioning or hydraulic connection procedures, or operation above the rated limits for pressure or shaft speed;
- freeze damage caused by exposure to sub-zero temperatures with water or pumped liquid remaining in the manifolds and chambers;
- the use of non-genuine spare parts or components, or parts not approved by the manufacturer;
- normal wear of wearing parts and consumables, including diaphragms, valves and seals.

1.3.6. The manufacturer reserves the right to make design changes to improve product performance without any obligation to upgrade pumps manufactured and supplied previously.

1.3.7. Warranty claims must be sent to the manufacturer, Remkom LLC, with a claim report and the completed product data sheet. Disputes that cannot be resolved out of court shall be referred to the courts in accordance with the applicable laws of the Republic of Belarus.

1.4. Intended use

1.4.1. The diaphragm pumps (referred to below as the pumps) are designed for installation in machinery for chemical protection of field crops against pests, diseases and weeds, and in other machinery that requires liquids to be pumped under pressure.

1.4.2. The pumps are components intended for installation in trailed, semi-trailed, self-propelled and tractor-mounted boom sprayers, machines for chemical protection of field and orchard crops, and other agricultural machines and stationary process systems.

1.4.3. The pumps are designed for use at agricultural and industrial facilities. Submerged operation, whether inside a tank or below the liquid surface, is strictly prohibited.

1.5. Operating conditions (climatic factors)

1.5.1. Climatic version: U; installation category: 1 in accordance with GOST 15150-69 (outdoor use in a temperate macroclimatic region).

1.5.2. Environmental conditions for pump operation:

- ambient air temperature: +5 °C to +45 °C.

1.5.3. Do not operate the pump at ambient temperatures below +5 °C, or in freezing conditions with pumped liquid remaining in the discharge line.

1.6. Special instructions for manufacturers of complete equipment



1.6.1. When integrating the pump into other hydraulic systems or mobile machines, the designer and manufacturer of the complete machine (sprayer or mixing unit) must include comprehensive safety measures for the entire hydraulic system in the machine's operating documentation. These measures must cover, among other things, pressure relief valves, pressure gauges and drive shaft guards.

1.7. Misuse and application restrictions

1.7.1. Pumping media other than those specified in Sections 1.4 and 5.1 of this manual is strictly prohibited.



1.7.2. The pumps must not be used under the following conditions or for the following applications:

- pumping highly concentrated salt solutions containing more than 30 g/l, including seawater and natural or industrial brines;
- pumping paints, coatings, organic solvents, any type of motor fuel, flammable liquids or combustible liquids;
- pumping media containing chemicals that cause accelerated corrosion or degradation of the wetted components or pump diaphragms;
- use in areas with a risk of fire or explosion, or in chemically aggressive environments, unless the pump has the appropriate explosion protection;
- pumping food products in the food industry;
- use in equipment for washing or decontaminating personnel, washing animals, or cleaning energised electrical installations and cable systems.

1.7.3. Do not use the pump's own pressurised flow to wash its housing components. Clean external surfaces using methods that prevent high-pressure jets from striking seals, bearing assemblies or the air valve on the pulsation damper.

2. CONSTRUCTION AND OPERATION

2.1. Components and construction

2.1.1. The pump is a positive-displacement diaphragm pump comprising the following principal assemblies:

- housing: a casting made from a corrosion-resistant aluminium alloy, forming the crankcase that contains the drive mechanism;
- manifolds: the suction and discharge manifolds are made from aluminium or polymer materials resistant to agrochemicals;
- drive shaft: a steel shaft with two projecting ends, each with a 1 3/8" Z6 spline for transmitting torque from the tractor power take-off (PTO) or another drive;
- cylinder and piston assemblies and cylinder heads: a connecting-rod mechanism produces reciprocating piston motion, which is transmitted to the working diaphragms. The cylinder heads enclose the pumping chambers and clamp the diaphragms in position;

- valve assemblies: suction and discharge check valves ensure that the pumped medium flows in the required direction;
- pulsation damper: fitted to the discharge circuit to smooth out pressure fluctuations (pulsations) generated during pump operation;
- oil reservoir: used to fill the crankcase and check the oil level visually. The reservoir clearly indicates the minimum and maximum permissible oil levels.

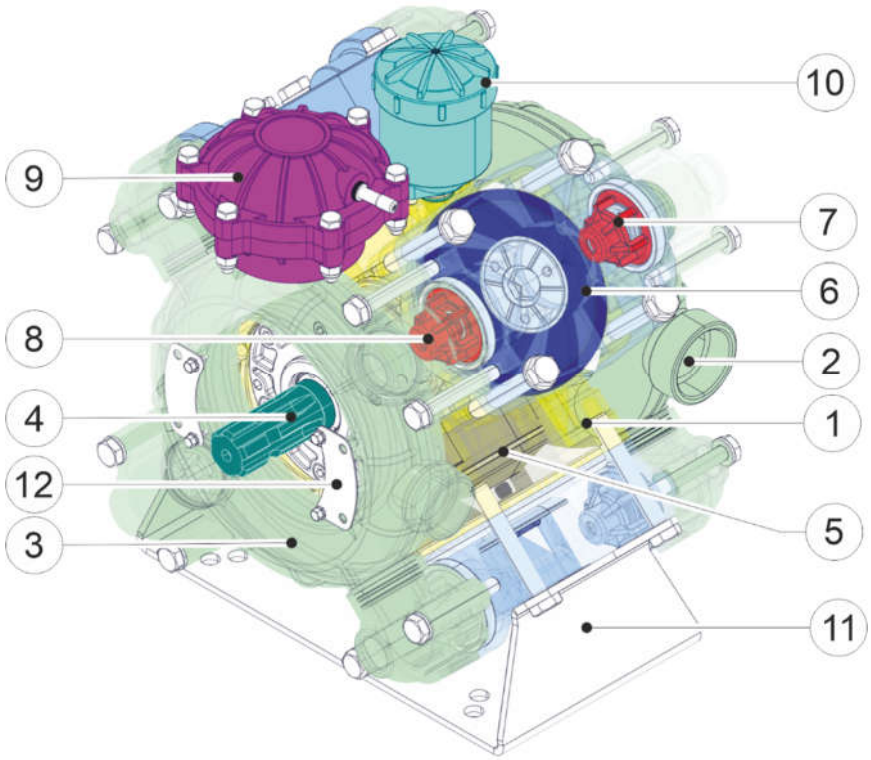

Fig. 2. Main components:

1 – housing; 2 – suction manifold; 3 – discharge manifold; 4 – drive shaft; 5 – cylinder and piston assembly; 6 – diaphragm; 7 – suction check valve; 8 – discharge check valve; 9 – pulsation damper; 10 – oil reservoir; 11 – mounting foot; 12 – guard mounting bracket

2.1.2. Metal components in contact with the pumped medium are made from stainless steel or have a protective anti-corrosion coating. All elastomer components, including diaphragms and seals, are made from chemically resistant compounds for reliable operation with approved agrochemicals.

2.1.3. The pump layout, showing the main components and their tightening torques, is illustrated in the relevant figures and tables in Sections 8 and 11 of this manual.

2.2. PRINCIPLE OF OPERATION

2.2.1. The pump is driven by the tractor PTO through a PTO drive shaft or another type of transmission. An eccentric converts rotation of the pump shaft into reciprocating motion of the pistons. The diaphragms are secured to the pistons with clamping washers and bolts. The outer edges of the diaphragms are clamped and sealed between the cylinder liner ends and the pump heads.

2.2.2. The operating cycle comprises two strokes:

1. suction stroke: as the piston moves towards bottom dead centre, the diaphragm deflects and creates a vacuum in the pumping chamber. The pressure difference opens the suction (inlet) valve, allowing the pumped liquid to fill the chamber. The discharge valve remains closed;
2. discharge stroke: as the piston returns, the diaphragm moves towards top dead centre. Pressure in the chamber rises, the suction valve closes and the discharge (outlet) valve opens, allowing liquid to flow into the discharge manifold.

2.2.3. The suction and discharge check valves ensure that the pumped medium flows in one direction only.

2.2.4. The oil filling the space between each piston and diaphragm provides continuous lubrication of the sliding surfaces.

3. TECHNICAL SPECIFICATIONS

The principal pump parameters and specifications are listed in Table 1.

Table 1

Principal parameters and specifications

No.	Parameter	Unit	Value by model	
			H-260 AGRO	H-280 AGRO
1	Rated flow rate, minimum	m3/h (l/min)	15,6 (260)	16,8 (280)
2	Pump shaft speed, maximum	rev/s (rpm)	9,17 (550)	
3	Maximum operating pressure in the discharge circuit	MPa	2,0	
4	Input power, maximum	kW	11,2	12,8
5	Suction port connection thread		G2”	
6	Discharge port connection thread		G1 1/2”	
7	Overall dimensions, maximum: – length – width – height	mm	 440 400 360	
8	Pump mass, maximum	kg	39	
9	Pump structural mass, maximum	kg	37	
10	Packaged pump mass, maximum	kg	41,5	

4. SAFETY INSTRUCTIONS

4.1. General operating safety requirements.



4.1.1. Do not start the pump with any shut-off devices closed in the hydraulic system’s discharge line. Starting against excessive back pressure causes water hammer, premature diaphragm failure, rupture of the discharge manifolds and hazardous conditions. Before starting the drive, make sure that the bypass return line is open and the system is

depressurised.

4.1.2. Regularly check the condition and leak-tightness of the suction and discharge manifolds and their connecting fittings, as specified in the Maintenance section. Replace any component immediately if it has through-wall defects, cracks, signs of cavitation damage or leaking connections.



4.1.3. All rotating and moving pump components, including projecting shaft ends, must be enclosed by fixed yellow guards to prevent accidental contact by personnel.

4.1.4. PTO drive shafts transmitting torque from the tractor PTO to the pump shaft must have guards at both the tractor and pump ends. The drive shaft must have its own plastic guard, secured against rotation by restraining chains in accordance with GOST EN 15811. Operation with damaged or missing drive guards is strictly prohibited. The guards must overlap by at least 50 mm.

4.1.5. The equivalent sound pressure level generated by the pump when installed on a sprayer and operating at rated conditions does not exceed 79 dB(A).

NOTICE: the actual noise level at the operator's workstation depends on the design of the hydraulic system and the sprayer or machine frame on which the pump is installed. The manufacturer of the complete machine must measure the noise level of the assembled equipment. If the level exceeds 80 dB(A), the operator must wear hearing protection, such as earmuffs or earplugs, in accordance with GOST 12.4.051.



4.1.6. The manufacturer of the complete machine (sprayer) must provide and maintain safety signs in clearly visible locations, warning personnel of injury risks during normal operation and maintenance.



4.1.7. Accessible pump components are designed without sharp edges or burrs. Guards may be removed only with tools and with the drive completely stopped.



4.1.8. Do not exceed the maximum drive shaft speed of 550 rpm or the permissible transmission misalignment limits (see Section 7.2).

5. PREPARATION FOR USE

5.1. Requirements for pumped media

5.1.1. The pumps are designed for use with working liquids containing any agrochemicals, including pesticides and liquid mineral fertilisers, duly approved for agricultural use in the Republic of Belarus.

5.1.2. The physical properties of the pumped medium must meet the following requirements:

- agrochemical suspensions, including pesticide and mineral fertiliser suspensions, may be pumped provided the mass fraction of insoluble solids does not exceed 0.5 %;
- the nominal viscosity and density must be close to those of water (density ρ ≈ 1.0 kg/dm3 and kinematic viscosity ν ≈ 1 mm2/s).

5.1.3. Pumping liquids with a density above 1.1 kg/dm3, including all grades of urea ammonium nitrate solution (UAN) and liquid compound fertilisers, is classified as heavy-duty operation. The following requirements are mandatory:

- limit the pump drive shaft (PTO) speed in accordance with Section 5.5 of this manual;
- thoroughly flush the pump's liquid circuit with clean water after every working shift (see Table 3).

5.1.4. The temperature of the pumped liquid must be between +5 °C and +38 °C. Other uses or pumped media require prior agreement with Remkom LLC.

5.2. Connecting the suction and discharge ports

5.2.1. The pump suction port (inlet) has a larger diameter than the discharge port (outlet).

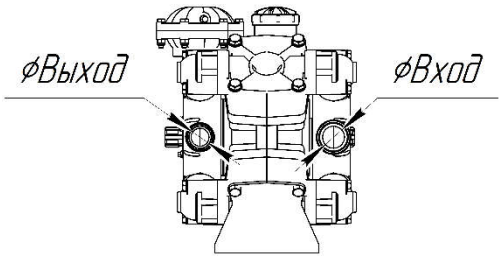

Fig. 3

NOTICE
Do not reverse the flow direction by interchanging the functions of the suction and discharge ports. Failure to follow this requirement will cause pump failure and damage the valve assemblies.

5.3. Suction line requirements

5.3.1. Install the suction line to meet the following requirements:

- throughout its length, the internal pipe or hose diameter must be at least equal to the internal diameter of the pump suction port;
- the line must be completely leak-tight; air must not enter the suction system;
- the line must have no pinched sections, restrictions or abrupt changes in cross-section that could cause turbulent flow at the pump inlet.

5.3.2. Fit a filter in the suction line. Its flow capacity must be at least twice the pump's maximum flow rate. The filter element design and degree of fouling must not cause the permissible inlet vacuum to be exceeded. The recommended filter rating is 32 to 50 mesh (32 to 50 openings per linear inch).

5.3.3. Hydraulic limits at the pump inlet:

- maximum positive suction pressure when gravity-fed from a tank above the pump: 0.03 MPa (0.3 bar);
- maximum permissible suction vacuum: 0.03 MPa (0.3 bar);
- maximum suction lift: 3 m.

5.4. Discharge line requirements

5.4.1. Secure all discharge circuit components, including flexible hoses, connecting fittings and valves, and ensure that they remain completely leak-tight at maximum operating conditions. The internal diameter of the pressure hoses must match the nominal size of the pump discharge port.

5.4.2. Discharge line components must be marked with their maximum permissible working pressure. The rated working pressure of every discharge circuit component must be at least equal to the maximum pump discharge pressure specified in Table 1 of this manual.

5.5. Drive shaft speed and direction of rotation



5.5.1. Do not exceed the maximum rated drive shaft speed shown on the nameplate of the particular pump model and in Table 1.

5.5.2. The minimum permissible shaft speed for continuous operation under load (n_{min}) is 60 % of the rated speed (n_{rated}) and is calculated as follows:

$$n_{min} = n_{rated} \times 0.6$$

Calculation example: *at a rated shaft speed n_{rated} = 550 min^{-1}, the minimum permissible shaft speed is:*

$$n_{min} = 550 \times 0.6 = 330\ min^{-1}$$



NOTICE
During heavy-duty operation, when pumping liquids with a density above 1.1 kg/dm^3, including UAN and liquid compound fertilisers, do not exceed a maximum drive shaft speed of 450 rpm. Exceeding this speed causes inertial failure of the check valves.

5.5.3. The drive shaft of AGRO series pumps may rotate in either direction, clockwise or anticlockwise.

6. HYDRAULIC SYSTEM CHECKS

6.1. Pressure regulator and pressure relief valve requirements

6.1.1. Fit a pressure regulator (unloader valve) in the hydraulic system's discharge line. The regulator maintains the required operating pressure and prevents it from exceeding the maximum values specified in Table 1 of this manual.



6.1.2. Select the pressure regulator strictly according to the maximum flow rate and operating pressure of the particular pump model.



NOTICE
Do not operate the pump above its maximum pressure, even briefly. Incorrect installation or adjustment of the pressure regulator can damage pump components and put personnel at risk of injury.



6.1.3. To protect the hydraulic system if the pressure regulator fails or jams, fit an additional emergency pressure relief valve in the discharge circuit, with a flow capacity of at least 280 l/min. The valve must be factory-sealed. Its opening pressure setting must not exceed 2.0 MPa (20 bar).

6.2. Effect of nozzle condition on pump operation

6.2.1. Normal wear of the sprayer boom nozzle orifices causes the operating pressure in the hydraulic system to fall. Do not **compensate** for this pressure drop by overtightening or adjusting the pressure regulator valve spring. Replace worn nozzles if a pressure drop is detected.

6.2.2. To ensure effective hydraulic agitation in the tank, the rated pump flow must exceed the combined maximum flow of all boom nozzles operating simultaneously by at least 10 %. Excess liquid must flow continuously through the bypass return line.

6.3. Checking and adjusting the pulsation damper

6.3.1. Check the air pressure in the pulsation damper before initial start-up and every day before starting work.

6.3.2. Check and adjust the air pressure only with the pump completely stopped and the liquid circuit depressurised. Measure the pressure with a tyre pressure gauge through the standard air valve on the pulsation damper.



NOTICE
Do not operate the pump with an uncharged or incorrectly charged pulsation damper. Operating without air in the damper causes severe pressure pulsations in the hydraulic system and premature failure of the damper diaphragm.

6.3.3. Set the air pressure in the pulsation damper according to the intended liquid operating pressure, as specified in Table 2.

Table 2

Pulsation damper air pressure settings

Intended liquid operating pressure, MPa (bar)	0,5 (5,0)	1,0 (10,0)	1,5 (15,0)	2,0 (20,0)
Required pulsation damper air pressure, MPa (bar)	0,2 (2,0)	0,5 (5,0)	0,6 (6,0)	0,7 (7,0)

Note: the factory air pressure setting in the pulsation damper at delivery is 0.4 to 0.5 MPa (4.0 to 5.0 bar).

6.4. Instrumentation requirements

6.4.1. Fit the system pressure gauge as close as possible to the pump discharge port. The maximum pressure values shown on the pump nameplate and in Table 1 refer to the pressure measured at this point.

6.4.2. The actual pressure at the boom nozzles may be lower than the pump gauge reading because of pressure losses in the pipes, hoses and section valves. Take this into account when setting the agrochemical application rate.



6.4.3. All sprayer hydraulic circuit components, including hoses, connections and filter housings, must be rated to withstand the pump's maximum operating parameters.

7. OPERATING PROCEDURES (INSTALLATION, START-UP, OPERATION AND PRESERVATION)

7.1. Handling and installation location

7.1.1. Products weighing up to 20 kg may be handled manually. Use lifting equipment and textile slings to handle or lift pumps weighing more than 20 kg, taking care not to damage the housing. The mass of each pump model is specified in Table 1 of this manual.

Slinging methods and lifting points are specified in Section 7.1.4.

7.1.2. To reduce cavitation loads and extend the life of wearing parts such as diaphragms and valves, install the pump below the normal liquid level in the main tank (flooded suction) or at the same level.

7.1.3. The pumps are self-priming and may be installed above the supply tank liquid level. The maximum self-priming suction lift, measured vertically between the pump suction port centreline and the tank liquid surface, must not exceed 3 m.

7.1.4. Slinging arrangement and lifting instructions.

1. Lift and handle the pump using soft textile webbing slings rated for at least 100 kg. Do not use steel wire ropes or chains without protective sleeves, as they can damage the aluminium housing and polymer components.
2. Use a basket hitch around the lower part of the cast pump housing, between the cylinder heads and the mounting feet.
3. NEVER attach lifting equipment to, or lift the pump by, any of the following:
    - suction or discharge manifolds or ports;
    - oil reservoir;
    - drive shaft ends;
    - pulsation damper.
4. Keep both sling legs evenly tensioned during lifting to prevent the pump from tipping or slipping out.

7.2. Pump installation

7.2.1. Securely mount the pump on a level horizontal machine frame or platform. The pump mounting feet must be horizontal, with a maximum permissible inclination of 10°, to

maintain the correct crankcase oil level, ensure proper lubrication and allow effective drainage of process leakage.

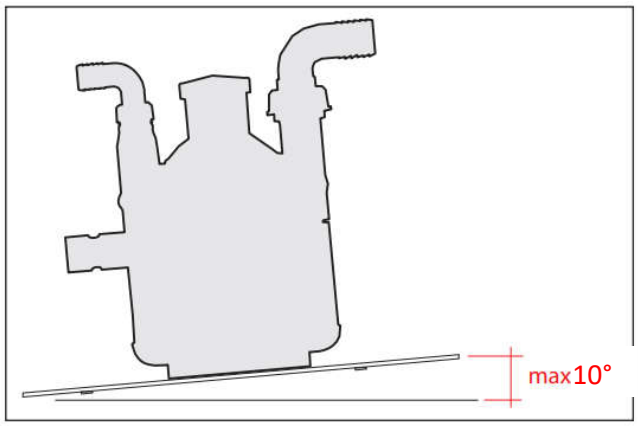

Fig. 4.

7.2.2. When installing the drive, meet the following requirements:

- for direct drive through a coupling or gearbox, align the pump drive shaft precisely with the power source shaft;
- a PTO drive shaft may operate at an angle, but the joint angles must be kept as small as possible. During continuous operation, the maximum working joint angle must not exceed 20°. The pump guard and PTO shaft guard must overlap by at least 50 mm. When the pump or machine is detached from the tractor, rest the PTO drive shaft on a dedicated support to prevent dirt contamination and guard damage;
- for belt drive, ensure that the pulley shafts are parallel, the pulley grooves are aligned and the belts have the specified tension;
- secure the pump housing with bolts of property class 8.8 or higher, locked against loosening.

7.2.3. Connect the suction and discharge circuits to the pump ports using reinforced flexible hoses only. Do not connect rigid metal pipes directly to the pump ports, as this would transmit vibration loads.

7.3. Start-up and operating checks

7.3.1. Before starting the pump, always:

- check the oil level in the oil reservoir and top up to the specified mark if necessary;
- check and, if necessary, adjust the pulsation damper air pressure in accordance with Table 2;
- set the pressure regulator handle or handwheel to “0” or “OFF” (unrestricted bypass return) to allow the pump to prime and draw in liquid;
- check that the suction and discharge filters are clean.

7.3.2. Start the pump drive. Priming must take no more than 10 seconds, until a steady liquid flow appears in the return line. Once the liquid circuit is full and the air has been expelled, turn the regulator handle gradually to set the required operating pressure. Do not exceed the maximum pressure of 2.0 MPa specified in Table 1.



7.3.3. Do not start or run the pump, even briefly, with the suction line shut-off valve closed or not fully open.

7.4. Stopping and flushing the pump

7.4.1. Flush the pump liquid circuit with clean water after each working shift, before short-term storage, or before a break in operation lasting more than 60 minutes. To flush, run the pump with clean water for at least 2 minutes, or at least 5 minutes after pumping UAN.

7.4.2. After flushing, disconnect the suction line and run the pump without load for no more than 10–15 seconds to expel all residual flushing water from the manifolds.



NOTICE
Never leave the stopped pump filled with working liquid for more than 1 hour. Premature diaphragm failure and valve corrosion are most often caused by prolonged static contact with agrochemicals while the pump is idle, rather than by wear during operation.



Do not run the pump dry for extended periods, as this causes heating and may damage pump components.



7.4.3. Clean external pump surfaces using methods that prevent pressurised water or cleaning solution from entering the drive (eccentric) shaft seals or the oil crankcase through its air valve (breather).



7.4.4. Never discharge residual working liquids or flushing water directly onto the soil or into open bodies of water. Dispose of contaminated water in accordance with applicable environmental legislation.

7.5. Freeze protection (preparation for winter storage)

7.5.1. Preserve the pump liquid circuit for winter storage or whenever sub-zero ambient temperatures are expected. Feed automotive antifreeze or a propylene-glycol-based heat-transfer fluid, mixed at 50/50 %, into the suction system and run the pump until the fluid emerges from the discharge line. Antifreeze protects the internal passages against freezing and prevents rubber seals from drying out.



NOTICE

- Do not use undiluted antifreeze concentrate for preservation, as its physical and chemical properties may adversely affect the diaphragm material.
- NEVER start the pump with ice in its internal passages, or at sub-zero ambient temperatures without prior preservation. This can rupture the housing or destroy the piston assembly.
- If you suspect that liquid has frozen inside the pump, move it to a heated room and allow the entire hydraulic circuit to thaw naturally before starting. Never use an open flame to heat the pump.

8. MAINTENANCE AND LUBRICATION

8.1. Scheduled maintenance

8.1.1. The scheduled maintenance intervals for the pump under rated operating conditions are listed in Table 3.

Table 3

Scheduled maintenance intervals

Interval (operating hours)	Work to be performed	Manual reference
Daily: before starting work	Visually check joints and manifolds for leaks	Section 7.3.1
	Check the crankcase oil level	Section 7.3.1
	Check the pulsation damper air pressure.	Section 6.3
at the end of work	Flush the pump with clean water	Section 7.4
After the first 50 operating hours (running-in period)	Change all the crankcase oil for the first time	Section 8.2
Every 250 hours	Change all the crankcase oil	Section 8.2
	Replace the working diaphragms as a preventive measure	Section 8.2
Every 750 hours	Replace the suction and discharge valve assemblies	Section 8.2



NOTICE

Do not use diaphragms that have pumped UAN for more than 100–150 hours for subsequent work with pesticide solutions. Contact with mineral salts reduces the life of the diaphragm elastomer by a factor of 2–2.5, sharply increasing the risk of sudden rupture and resulting in unplanned agricultural machinery downtime.



8.1.2. Never carry out work requiring physical contact with the equipment while the pump is running, including tightening bolts or seals, or making adjustments.

8.2. Replacing the working diaphragms





DANGER

Before dismantling a pump that has been used with working liquids, thoroughly flush its internal passages and wash its exterior with clean water. Dismantling and maintenance must be carried out using chemically resistant personal protective equipment (PPE): gloves, safety goggles and a respirator fitted with a filter of at least Class A in accordance with GOST 12.4.235.

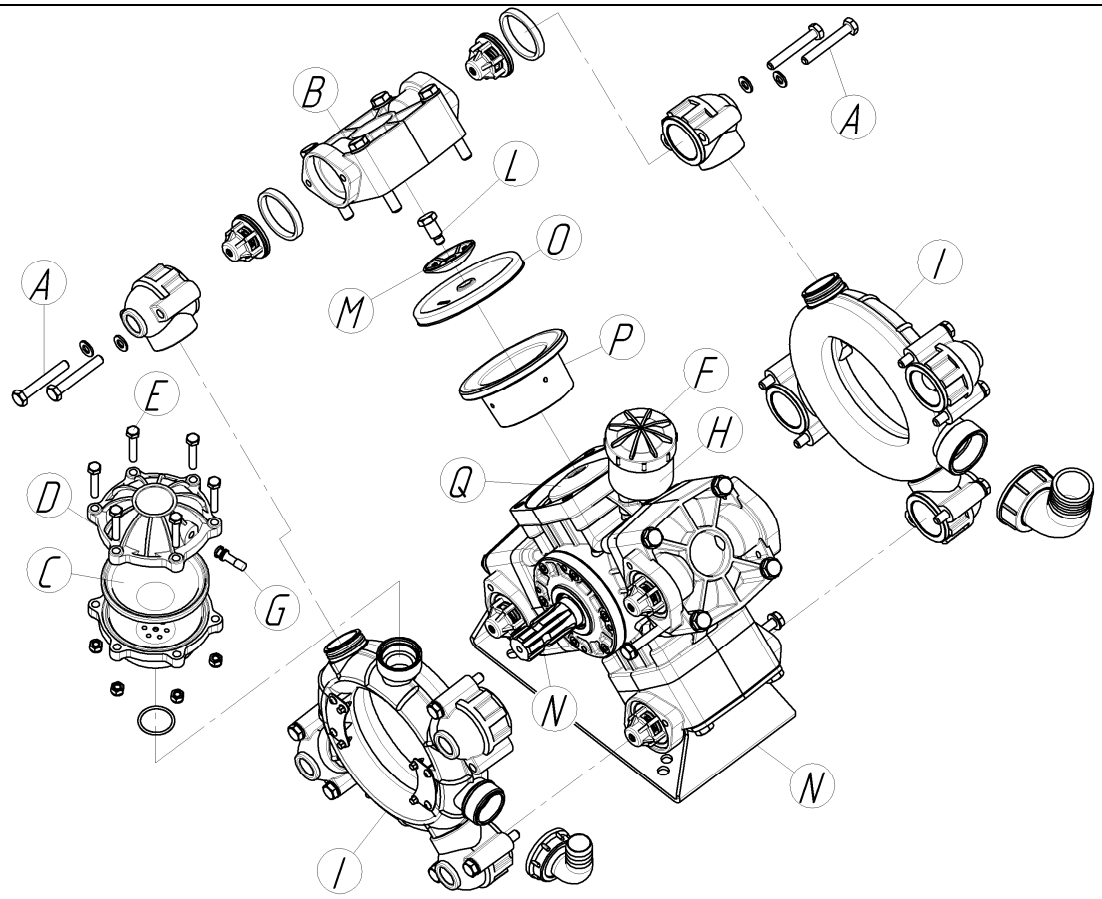

Fig. 5

1. DRAIN THE PUMP OIL: first remove the oil filler cap (F), then drain the oil through the crankcase drain plug at the *bottom* of the pump.

2. REMOVE THE MANIFOLDS: undo the bolts (A) and remove the manifolds (I). With the manifolds removed, inspect, clean and, if necessary, replace the valves.

3. REMOVE THE HEADS: do not undo the bolts on all heads (B) at once. Remove and service each head (B) separately, completing steps 4–6 below before moving to the next head. Remove *the* head screws (A), then take off the *pump* head (B), gently levering it free if necessary.

4. REMOVE THE DIAPHRAGMS: turn *the* shaft (N) to bring the piston (Q) to top dead centre. Undo the bolt (L) and *remove* the washer (M). Remove the diaphragm (O). If necessary, remove the liner (P) and wash the internal components with cleaning fluid or clean oil. Refit the liner (P) in its original position.

5. FIT THE NEW DIAPHRAGM: thoroughly clean the threaded hole in the piston (Q). Insert the *bolt (L)* through *the* washer (M) and the hole in *the* new diaphragm (O). Fit this assembly to the piston (Q), then tighten the bolt to the specified torque (see Section 11). Turn the shaft (N) to *bring* the piston (Q) and diaphragm (O) to *bottom* dead centre. Carefully seat the outer edge of the diaphragm (O) in its groove around the entire circumference of the pump housing.

6. REFIT THE HEAD: when refitting *the* head (B), make sure that the valves are correctly positioned. Each cylinder has two valves: one admits liquid into the chamber and the other releases it. TAKE PARTICULAR CARE DURING THIS OPERATION. Once the head (B) is correctly positioned, tighten the *screws* (A) to the specified torque (see Section 11).

7. REPLACE THE PULSATION DAMPER DIAPHRAGM: completely release the air through the valve (G). *Remove* the screws (E) *and* the damper *cover* (D). Remove the diaphragm (C). Correctly position the new diaphragm (C), refit the cover (D) and tighten *the* screws (E) to the specified torque (see Section 11). Charge the pulsation damper to suit the pump operating pressure (see Table 2).

8.3. Filling the crankcase with oil and commissioning

8.3.1. After reassembling the mechanical components, remove cap F from oil reservoir H. Fill the lubrication circuit with SAE 15W-40 engine oil to the nominal level mark on reservoir H. The approximate crankcase oil fill must not exceed 1.9 l (see Section 10).

8.3.2. Turn drive shaft N through several revolutions by hand to distribute the oil and release trapped air from the passages.

8.3.3. Test-run the pump with no pressure in the discharge line, with the regulator handle at “0” or “return to tank”. After running without load for 5 minutes, gradually raise and release the system pressure several times in brief cycles to remove any remaining air from the liquid passages. Stop the drive, recheck the oil level and top up to the mark if necessary.



IMPORTANT
During the first start-up after repairs, continuously monitor the oil in the reservoir. Oil turning white, indicating an oil/water emulsion, means that the working diaphragms are leaking or have been fitted incorrectly. Stop the pump immediately and correct the assembly fault.

8.4. Lubricant requirements

8.4.1. The pump is filled with the required quantity of oil at the factory. SAE 15W-40 engine oil is recommended for maintenance. Recommended lubricants are listed in Table 4.

Table 4

Recommended lubricant brands

BRAND	TYPE
Favorit	Multi SF 15W-40
Rosneft	Standart 15W-40 SF/CC
Gazpromneft	Standard 15W-40
Lukoil	Standard 15W40 SF/CC
Pemco	iDRIVE 114 15W-40 API CG-4/CF-4/CF/SL
Mannol	Universal 15W-40 API SG/CD

8.4.2. Changes or fluctuations in the oil reservoir level during start-up and changes in liquid operating pressure are normal characteristics of the piston/diaphragm assembly. A slight drop in oil level during the first operating hours after an oil change occurs as internal cavities fill and normally requires only a single top-up.



NOTICE

- Never start or operate the pump without oil in the crankcase or with the oil level below the minimum mark.
- A sudden drop in oil level or a change in its appearance after several operating hours indicates a ruptured working diaphragm or a severe restriction or blockage in the suction line causing cavitation.

8.4.3. Carry out all maintenance only after the drive has stopped completely, the hydraulic system pressure has been reduced to zero and the pump housing components have cooled to a safe temperature not exceeding +40 °C.

8.5. Environmental protection and disposal



8.5.1. Collect, store and dispose of used engine oil, replaced components and flushing water in a way that completely prevents their release into the environment.



8.5.2. When permanently withdrawing the pump from service for disposal, separate its components by material: ferrous metals, non-ferrous metals, polymers and elastomers. Transfer them to specialised waste collection and recycling organisations in accordance with the applicable laws of the Republic of Belarus. Completely remove all residual pumped liquid or chemicals from the pump before disposal.

9. REPAIRS (TROUBLESHOOTING)





DANGER

9.1. Carry out troubleshooting and repairs only with the pump drive completely stopped and a “Do not switch on – personnel at work” sign displayed on the controls. Before disconnecting the pump from the system, drain all working liquid and flush the internal passages. Keep the hydraulic circuit depressurised and wear appropriate PPE during this work.

9.2. Possible diaphragm pump faults, their causes and recommended remedies are listed in Table 5.

Table 5

Possible faults and remedies

Fault	Probable cause	Remedy
1. No pressure in the discharge circuit, or the pump does not reach rated pressure	1.1. Suction line filter blocked or partially obstructed	Clean the filter element (cartridge or insert), or fit a filter with the required flow capacity
	1.2. Suction hose blocked or pinched	Check the hose routing and remove foreign objects or blockages
	1.3. Mechanical damage to the suction hose, causing loss of integrity	Replace the damaged hose section
	1.4. Suction circuit leakage allowing air to enter	Check the connections for leaks and tighten the clamps and threaded fittings
	1.5. Worn or damaged pressure regulator components	Inspect the regulator and repair it or replace the complete assembly
	1.6. The combined flow demand of the fitted boom nozzles exceeds the actual pump flow rate	A) Check the bypass valve setting and adjustment B) Check the nozzle wear, size and number of nozzles operating simultaneously
	1.7. Pump suction or discharge valves damaged or stuck closed	Remove deposits from the valves, or replace worn valve assemblies
2. Severe fluctuations in the pressure gauge reading and excessive pulsation in the	2.1. Incorrect pulsation damper air pressure, either too low or too high	Check the air pressure through the air valve and adjust it in accordance with Table 2

Fault	Probable cause	Remedy
discharge line	2.2. Suction filter element partially blocked	Remove and flush the suction filter cartridge
	2.3. Air trapped in the pump liquid chambers after assembly or start-up	With the pump stopped, remove the oil reservoir cap and turn the shaft by hand until all air has escaped. Test-run the pump as described in Section 8.3.3
3. Pump fails to draw in liquid or self-prime	3.1. Excessive air ingress through the suction line components	Check the fitting seals and hoses for damage and eliminate any leaks
4. Lubricating oil turns white (emulsion) and the crankcase oil level falls	4.1. One or more working diaphragms mechanically damaged or ruptured	**STOP THE PUMP DRIVE IMMEDIATELY!** Drain all contaminated oil, flush the crankcase and replace the complete set of working diaphragms as described in Section 8.2

10. MASS AND OIL CAPACITY

SERIES	RECOMMENDED OIL QUANTITY	PUMP MASS
	l	kg
AGRO H-260	*1.9*	*39 maximum*
AGRO H-280	*1.9*	*39 maximum*

11. TIGHTENING TORQUES

Item	1	2	3	4	5	6	7
	Diaphragm bolt	Pulsation damper air valve nut	Pulsation damper bolt	Head-to-housing bolt	Manifold-to-head bolt	Bearing housing cover screw	Oil reservoir mounting screw
Model	N·m	N·m	N·m	N·m	N·m	N·m	N·m
H-260, H-280	23-25	3-4	23-25	75-80	23-25	23-25	6-7

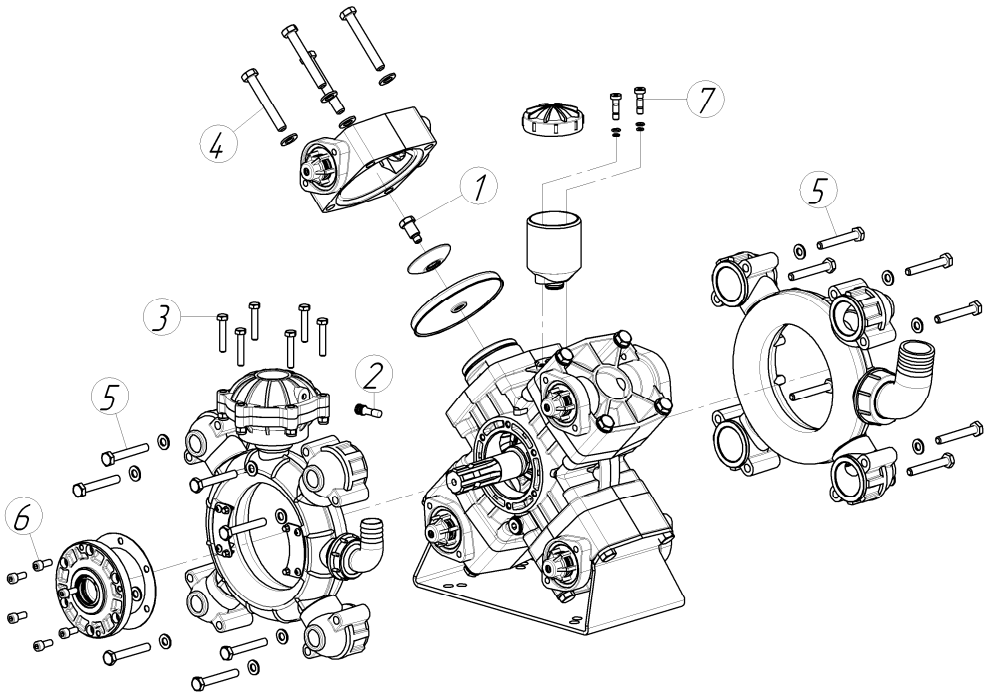

Fig. 6

12. TRANSPORT AND STORAGE

12.1. Transport requirements

12.1.1. Pumps may be transported by road, rail, sea or air in covered vehicles or enclosed transport spaces, in accordance with the freight regulations applicable to the mode of transport concerned.

12.1.2. For batch transport, palletise the packaged pumps on flat, single-deck, four-way-entry P4 pallets or standard Euro pallets measuring 1200 × 800 × 145.

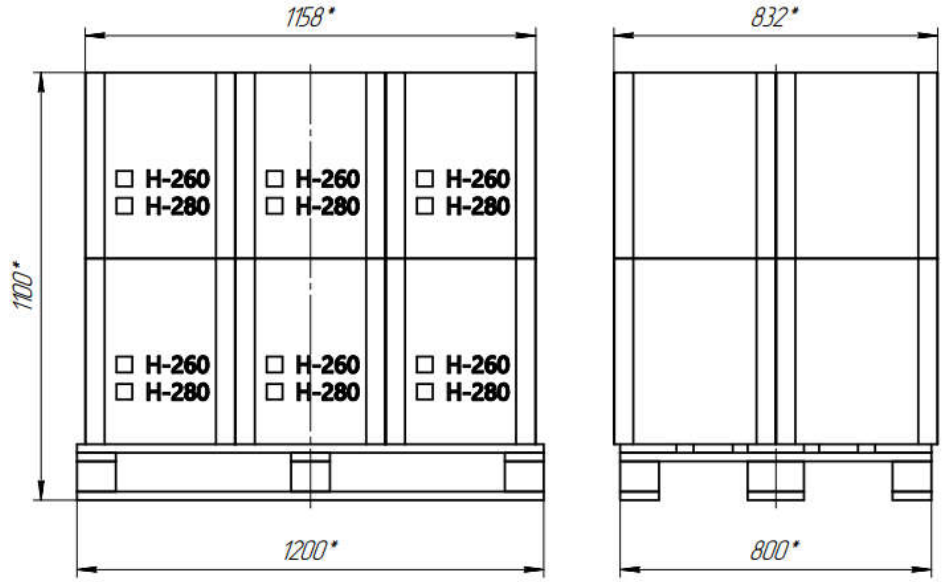

12.1.3. Stack boxes in aligned columns, directly one above another. Arrange them carefully so that the load's overall centre of gravity coincides with the geometric centre of the pallet platform. Boxes may overhang the pallet by no more than 20 mm, symmetrically on both sides.

12.1.4. Boxes may be stacked two layers high on a pallet. If stacked three layers high, cardboard sheets must be placed between the layers and the load must be secured with strapping over the stretch wrap: two straps lengthways and three across the pallet. Position the boxes so that the pump shipping marks remain visible from both sides of the pallet.

12.1.5. To secure the boxes to the pallet and protect them against dust and atmospheric moisture, wrap the palletised load in plastic stretch film at least 0.1 mm thick.

12.1.6. Start by securing the base of the load. The first film wraps must firmly cover both the pallet and the bottom layer of boxes to lock them together. Apply 5–7 securing layers at the base, then wrap evenly upwards and back down, stretching the film by 50 % to 70 % and overlapping each turn by at least 50 % of the film width.

12.1.7. During handling and transport, packaged pumps must not be subjected to heavy impacts or direct exposure to precipitation. Secure palletised loads inside vehicles or rail wagons to prevent them from shifting, overturning or striking one another.

12.2. Storage requirements

12.2.1. Store pumps in their packaging in enclosed warehouses. Climatic storage conditions must comply with Group 2 (C) of GOST 15150-69: enclosed spaces with natural ventilation and no artificial climate control.

12.2.2. Permissible storage temperature: −50 °C to +40 °C. Relative humidity must not exceed 80 % at +25 °C. The warehouse air must be free of aggressive vapours and gases that could corrode metals or degrade polymers and elastomer components.

13. SCOPE OF SUPPLY (SPECIAL ACCESSORIES)

13.1. The standard diaphragm pump supply package includes:

- complete pump assembly of the selected model;
- operating manual;
- catalogue sheet;
- product data sheet with warranty certificate.

13.2. By agreement with the customer, the pump may be supplied with protective guards and a spare parts and accessories kit as listed in Table 6.

Table 6

Special accessories and spare parts supplied to order

Item	Product or component name	Illustration	Quantity, pcs.	Note / specification
1	PTO drive shaft guard	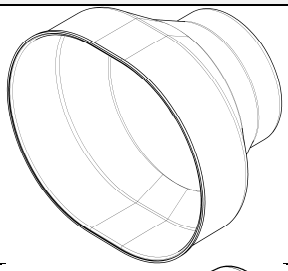	1	Fixed guard (yellow)
2	Universal guard	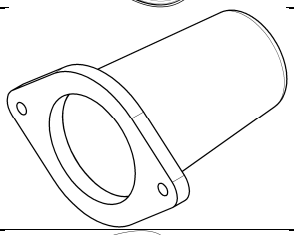	1	Supplied with two mounting screws
3	Working diaphragm set for the crankcase	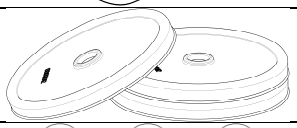	4	Spare parts (elastomer)
4	Suction/discharge valve assembly	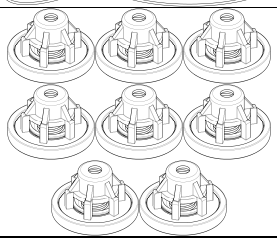	8	Spare parts (valve assembly)



РЕМКОМ ооо
213410 ул.Иванова, 3
г.Горки, Могилёвская обл.
РЕСПУБЛИКА БЕЛАРУСЬ
Тел. 375 2233 70091
Факс 375 2233 73377
www.remkom.by